Monotype*Pressing*
America

Product Name

CD_offset

Cutter #

n/a

Material
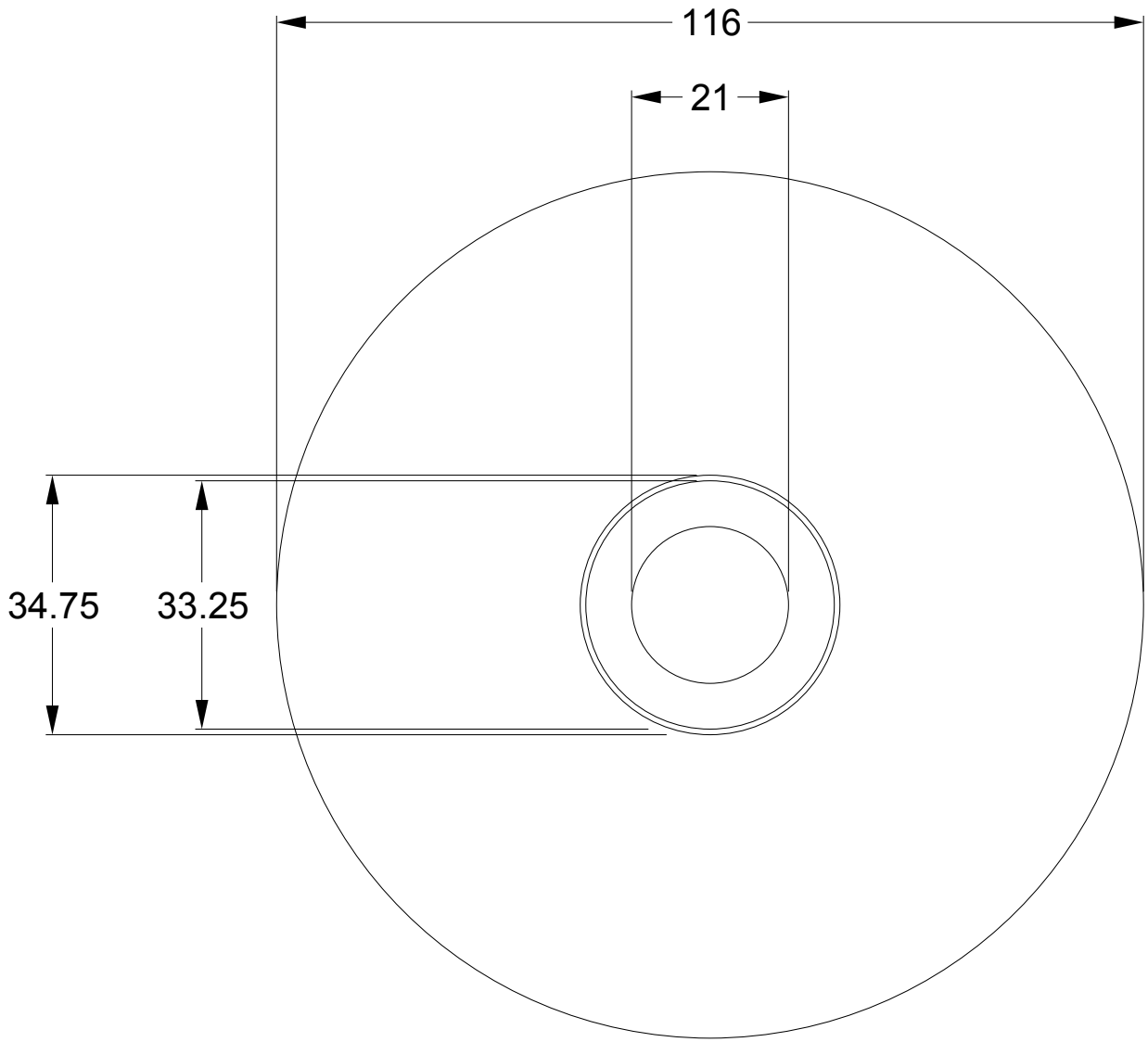
CD disc