Monotype*Pressing*

America

Product Name

DVD_5/9_offset

Cutter #

n/a

Material
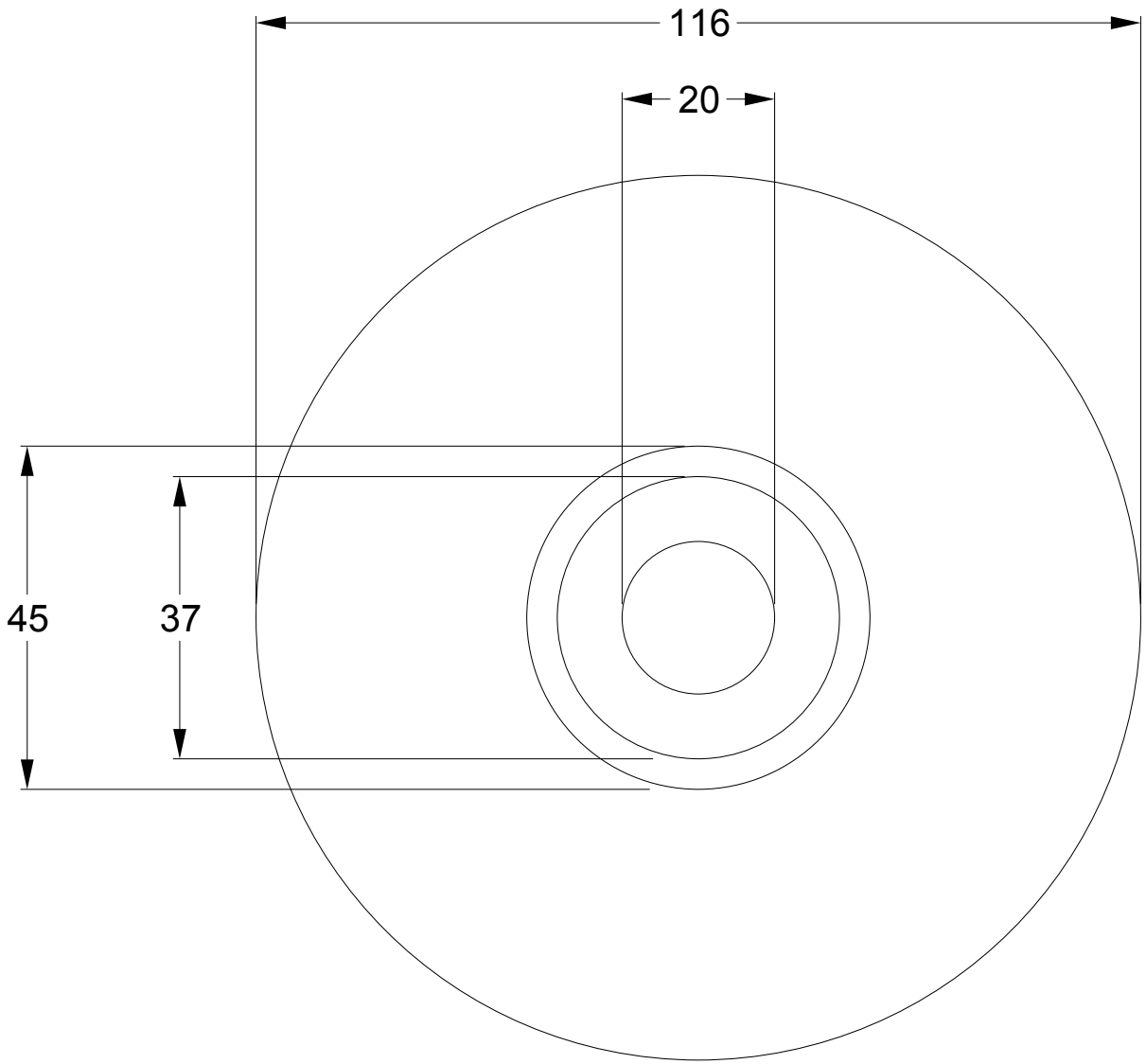
CD disc