Monotype*Pressing*
America

Product Name

label_12’’

Cutter #

2355

Material
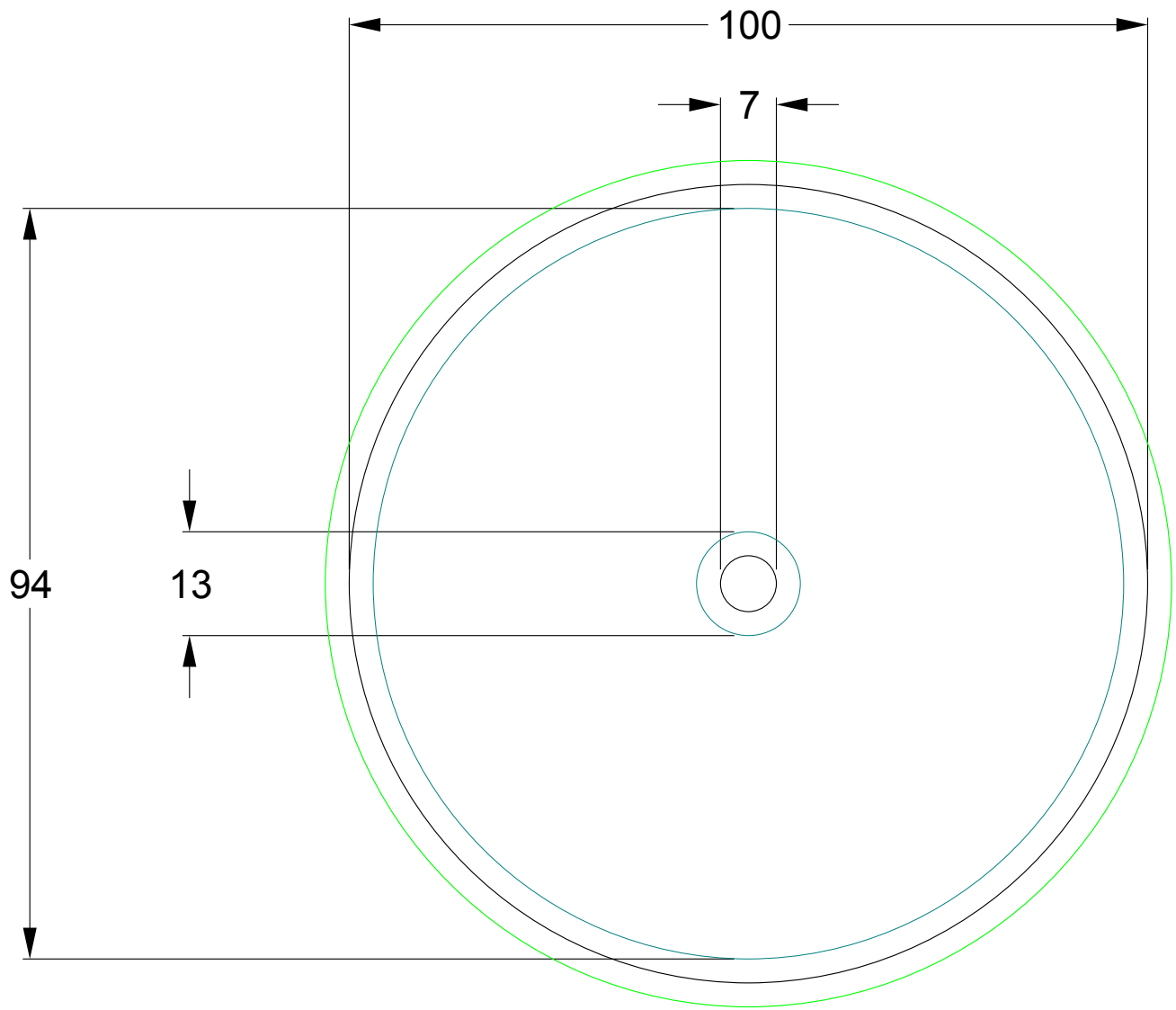
120g paper